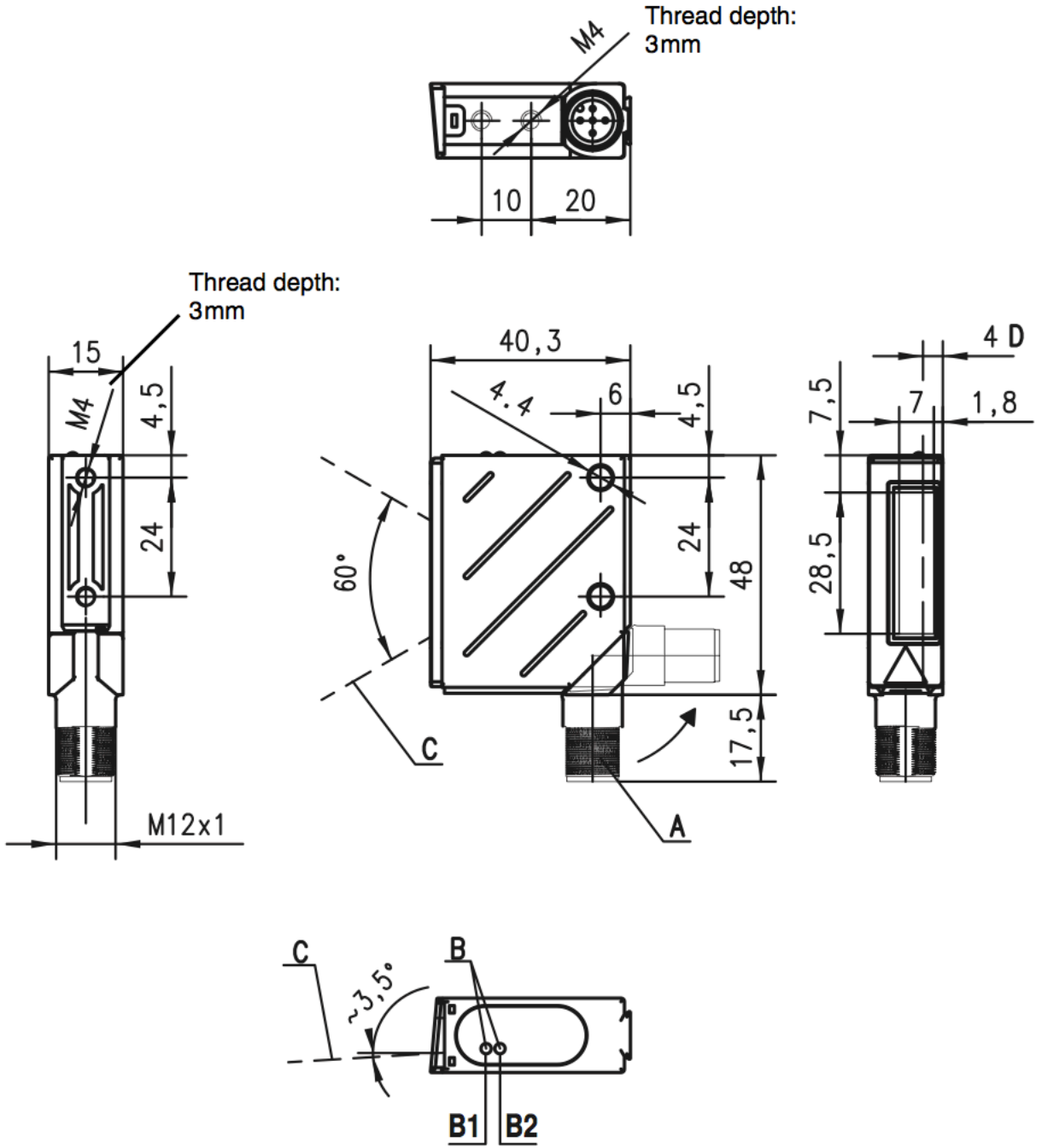

A Turning connector, 90°
B Indicator LEDs (B1: status LED, B2: decode LED)
C Scanning beam
D Optical axis